ABSTRACT

Efficient water management in coir-based cultivation is crucial to ensure optimal plant growth while minimizing groundwater depletion and environmental impact. This project presents an Automated Coir Moisture Monitoring and Control System using the PIC16F877A microcontroller, designed to intelligently maintain the desired moisture level in coir substrates. The system employs a DHT11 sensor to measure temperature and humidity, and a soil moisture sensor to monitor the coir's water content in real time.

When the detected moisture level falls below a predefined threshold, the controller automatically activates a water pump to irrigate the coir until the optimal moisture level is restored. The 16×2 LCD display provides live feedback of moisture percentage, temperature, humidity, and system status, ensuring transparency and ease of monitoring. Additionally, manual threshold adjustment buttons allow users to fine-tune the target moisture level based on environmental or crop requirements.

By using feedback-based control and precise sensor calibration, the system prevents over-irrigation and groundwater seepage, ensuring sustainable water use. Its modular, low-cost design makes it suitable for agricultural, horticultural, and coir-product industries, promoting eco-friendly irrigation automation.

TABLE OF CONTENTS

CHAPTER NO.	TITLE	PAGE NO.
	ABSTRACT	ii
	LIST OF FIGURES	iv
	LIST OF ABBREVIATIONS	v
1	INTRODUCTION	1
	1.1 BACKGROUND	1
	1.2 PROBLEM STATEMENT	1
	1.3 OBJECTIVES OF THE PROJECT	2
	1.4 SCOPE OF THE PROJECT	2
2	LITERATURE SURVEY	3
	2.1 INTRODUCTION	3
	2.2 EXISTING MONITORING SYSTEMS	4
3	PROPOSED METHOD	5
	3.1 INTRODUCTION	5
	3.2 BLOCK DIAGRAM	5
	3.3 HARDWARE COMPONENTS	6
	3.4 METHODOLOGY	8
4	RESULT AND DISCUSSION	9
	4.1 SIMULATION RESULT	9
	4.2 HARDWARE OUTPUT	10
5	CONCLUSION AND FUTURE SCOPE	12
	5.1 CONCLUSION	12
	5.2 FUTURE SCOPE	12
	REFERENCES	13

LIST OF FIGURES

FIGURE NO.	TITLE	PAGE NO.
3.1	PROPOSED SYSTEM BLOCK DIAGRAM	5
3.2	PIC16F877A MICROCONTROLLER	6
3.3	CAPACITIVE MOISTURE SENSOR	6
4.1	PROTEUS SIMULATION CIRCUIT	9
4.2	LCD OUTPUT IN SIMULATION	10
4.3	HARDWARE PROTOTYPE	10

LIST OF ABBREVIATIONS

ABBREVIATION	FULL FORM
ADC	Analog-to-Digital Converter
CEC	Cation Exchange Capacity
EC	Electrical Conductivity
FC	Field Capacity
IoT	Internet of Things
LCD	Liquid Crystal Display
MAD	Maximum Allowable Depletion
MCU	Microcontroller Unit
PIC	Peripheral Interface Controller
UART	Universal Asynchronous Receiver/Transmitter
VWC	Volumetric Water Content

CHAPTER 1

INTRODUCTION

1.1 BACKGROUND

Coir, a natural fiber derived from the husk of coconuts, is a renewable resource with growing importance in both horticulture and geotechnical engineering. In horticulture, coir pith (or coco peat) is widely used as a soilless growing medium due to its high water retention capacity, excellent aeration, and near-neutral pH. It serves as a sustainable alternative to peat moss, the harvesting of which raises significant environmental concerns. In geotechnical applications, coir is processed into geotextiles, mats, and logs that are used for soil stabilization, erosion control, and the prevention of groundwater seepage. The effectiveness of coir in reducing seepage is attributed to its ability to decrease the seepage velocity of water through soil, thereby increasing the soil's resistance to piping failures.

The performance of coir in both fields is critically dependent on its moisture content. Proper hydration is essential for plant growth in agricultural settings and for maintaining the structural integrity and function of coir-based geotechnical structures. However, the physical properties of coir—such as its high porosity and variable water-holding capacity depending on the blend of pith, fiber, and chips—make precise water management a complex task.

1.2 PROBLEM STATEMENT

The primary challenge associated with the use of coir is inefficient water management, which leads to significant environmental consequences. In agricultural contexts, over-irrigation of coir media results in the leaching of residual salts (such as sodium and potassium) and applied fertilizers into the surrounding environment. This process contributes directly to groundwater contamination, posing a risk to local water resources and ecosystems.

Furthermore, the production of horticultural-grade coir is a water-intensive process, requiring large volumes of fresh water to wash the raw material and reduce its natural salinity. The wastewater generated from this process is often discharged without adequate treatment, further polluting local water bodies. In geotechnical applications, while coir is used to prevent seepage, oversaturation can compromise the structural integrity of coir-based reinforcements, paradoxically increasing the risk of

failure.

Existing methods for monitoring moisture often rely on manual checks, which are sporadic and fail to provide the real-time data needed for precise control. This lack of an efficient, automated monitoring system leads to excessive water use and exacerbates the environmental impact of coir applications. Therefore, there is a critical need for a device that can efficiently monitor coir moisture and automate water application to prevent seepage and minimize environmental harm.

1.3 OBJECTIVES OF THE PROJECT

This project aims to design and implement an affordable and efficient device for the real-time monitoring and control of moisture in coir-based media. The specific objectives include:

- To develop a sensor-based embedded system using a PIC16F877A microcontroller to continuously measure the volumetric water content of coir.
- To implement an automated control system that activates a motor for water application only when moisture levels fall below a predefined optimal threshold.
- To provide local data visualization through an LCD for immediate on-site monitoring.
- To integrate an ESP32 microcontroller for IoT connectivity, enabling remote data logging and monitoring via the ThingSpeak cloud platform.
- To create a system that directly addresses the problem of groundwater seepage and water waste by ensuring precise and efficient water application.

1.4 SCOPE OF THE PROJECT

The scope of this project is to develop a functional prototype of a smart coir moisture monitoring and control system. The device is designed to be adaptable for both small-scale horticultural applications (e.g., greenhouses, container gardening) and for monitoring geotechnical structures (e.g., erosion control blankets, levees). The system integrates hardware and software to provide a closed-loop solution that measures moisture, makes an intelligent decision, and actuates a response. The inclusion of IoT functionality allows for remote data access and analysis, making it a scalable solution for modern, sustainable land and water management practices. Future enhancements could involve integrating additional sensors and developing a dedicated mobile application for more advanced control and analytics.

CHAPTER 2

LITERATURE SURVEY

2.1 INTRODUCTION

The development of automated systems for environmental monitoring has become a significant area of research, particularly in agriculture and civil engineering. The goal of these systems is to replace inefficient manual monitoring with continuous, data-driven solutions that optimize resource use and improve outcomes. The core of such systems typically involves a combination of sensors, microcontrollers for data processing, and actuators for control actions. Moisture sensing is a well-established field with several available technologies, including resistive, capacitive, and Time Domain Reflectometry (TDR) sensors. Resistive sensors, while inexpensive, are prone to corrosion and are highly sensitive to the salinity of the medium, making them unreliable for long-term use, especially in materials like coir which can have variable salt content. Capacitive sensors offer a more robust alternative by measuring the dielectric properties of the medium, which are strongly correlated with water content. They are less affected by salinity and are more durable, making them a suitable choice for this application.

Microcontrollers are the central processing units in embedded monitoring systems. The PIC (Peripheral Interface Controller) family, particularly the PIC16F877A, is widely used in such projects due to its versatility, low cost, and robust set of peripherals, including an on-chip Analog-to-Digital Converter (ADC) necessary for reading analog sensors. For more advanced systems requiring connectivity, modern approaches often employ a dual-microcontroller architecture. A primary MCU like the PIC16F877A handles real-time sensor reading and control, while a secondary MCU with built-in Wi-Fi, such as the ESP32, manages IoT communication tasks like uploading data to cloud platforms**.**

2.2 EXISTING MONITORING SYSTEMS

Existing automated irrigation and environmental monitoring systems often utilize a combination of these technologies. Many systems for smart agriculture use soil moisture sensors to trigger irrigation, which has been shown to save significant amounts of water compared to timer-based schedules. These systems typically consist of a sensor connected to a microcontroller (such as an Arduino or PIC) that controls a relay connected to a water pump. For local feedback, an LCD is commonly used to display real-time sensor readings.

However, many existing systems are designed for general soil applications and may not be specifically calibrated or optimized for the unique properties of coir. This project aims to build upon

these existing methods by creating a system specifically tailored for efficient moisture management in coir to address the critical issues of seepage and environmental impact.

2.3 BLOCK DIAGRAM

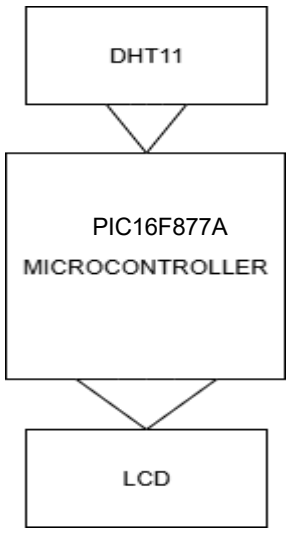

Figure 2.1 EXISTING METHOD

Figure 3.1 shows the existing system where a DHT11 sensor transmits temperature and humidity data to the microcontroller, which displays the readings on an LCD for local monitoring.

2.3.1 DHT11 SENSOR

The DHT11 sensor is a low-cost digital temperature and humidity sensor commonly used in embedded systems. It integrates a resistive humidity sensing component and an NTC thermistor for temperature measurement.

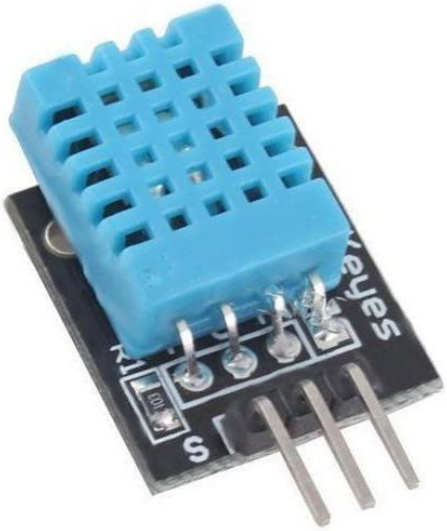

Figure 2.2 DHT11 SENSOR

The sensor features a calibrated digital signal output using a single-wire serial interface for easy integration. It operates at a voltage range of 3.3V to 5.5V and provides humidity readings from 20% to 90% RH with ±5% accuracy and temperature readings from 0°C to 50°C with ±2°C accuracy. Its small size, low power consumption, and reasonably fast response time make it suitable for environmental monitoring applications. Figure 3.2 represents the DHT11 sensor module, which is used for measuring environmental temperature and humidity in embedded systems.

2.3.2 PIC16F877A

Peripheral Interface Controller (PIC), and it refers to a family of microcontrollers developed by Microchip Technology. PIC microcontrollers are widely used in embedded systems for automation, data acquisition, and control applications due to their low cost and versatility.

Figure 2.3 PIC16F877A MICROCONTROLLER

Typical PIC devices feature configurable I/O ports, analog-to-digital converters, timers, and support for serial protocols like UART, making them suitable for sensor interfacing and real-time monitoring projects. Programming a PIC microcontroller usually requires tools like MPLAB and compilers such as CCS or XC8. Figure 3.3 represents a PIC microcontroller, which is used for controlling and interfacing sensors and output devices in embedded systems.

2.3.3 LCD

LCD stands for Liquid Crystal Display and is widely used in embedded systems for visually presenting data such as sensor readings or system status. A typical 16x2 LCD can display up to 32 characters over two rows, and is easily interfaced with microcontrollers like PIC or ESP32 using parallel data and control pins. It offers low power consumption, clear

visibility, and customizable display messages, making it ideal for onsite monitoring in IoT and automation projects. LCD stands for Liquid Crystal Display and is an electronic display module used to show sensor data, system status, or custom messages in embedded projects.

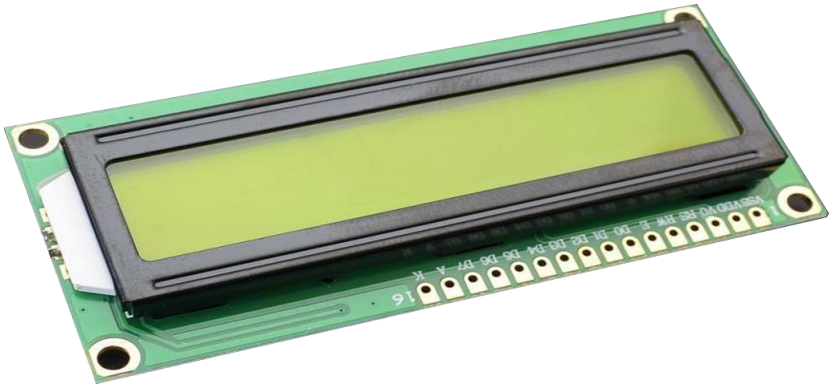

Figure 2.4 LCD

Figure 3.4 represents an LCD module used for real-time visualization of sensor data in embedded systems.

CHAPTER 3

PROPOSED METHOD

3.1 INTRODUCTION

The proposed system is an intelligent, automated device designed to efficiently monitor and control the moisture content of coir. It integrates a dual-microcontroller architecture to separate the tasks of real-time sensing and control from IoT communication, ensuring a robust and reliable system. The PIC16F877A microcontroller is responsible for acquiring data from a capacitive moisture sensor and controlling a water pump. This design provides a comprehensive solution for precise water management, directly addressing the goals of preventing groundwater seepage and minimizing environmental impact.

3.2 BLOCK DIAGRAM

The architecture of the proposed system is illustrated in Fig. 3.1. A capacitive moisture sensor is interfaced with the PIC16F877A, which reads the analog moisture data. The PIC processes this data, displays it on a 16x2 LCD, and controls a motor via a relay

3.3 HARDWARE COMPONENTS

1. **PIC16F877A Microcontroller:** The PIC16F877A is an 8-bit microcontroller that serves as the primary control unit for the system. It features a 10-bit multi-channel ADC, which is used to read the analog output from the moisture sensor. With 33 I/O pins, it provides ample connectivity for the sensor, LCD, and relay module. Its reliability and widespread use in embedded control applications make it a suitable choice for this project. A visual representation of the PIC16F877A is shown in Fig. 2.2.
2. **Capacitive Moisture Sensor:** A capacitive moisture sensor is used to measure the volumetric water content of the coir. Unlike resistive sensors, which are prone to corrosion, this sensor measures moisture based on changes in capacitance and is made of corrosion-resistant material, ensuring a longer service life. It provides an analog voltage output that is proportional to the moisture level, which is then read by the PIC's ADC. The sensor is shown in Fig. 2.3.
3. **ESP32 Microcontroller:** The ESP32 is a powerful microcontroller with integrated Wi-Fi and Bluetooth capabilities, making it ideal for IoT applications. In this system, it acts as the IoT gateway, receiving data from the PIC16F877A via UART and transmitting it to the ThingSpeak cloud platform. Its dual-core processor and rich set of peripherals allow it to handle wireless communication tasks efficiently without interfering with the real-time control functions of the PIC. The ESP32 development board is shown in Fig. 2.4.

4. **16x2 LCD:** A standard 16x2 character Liquid Crystal Display is used for on-site monitoring. It displays the real-time moisture percentage, allowing users to quickly assess the condition of the coir medium.
5. **Relay Module and Motor:** A 5V relay module acts as an electromechanical switch, enabling the low-voltage PIC microcontroller to control a higher-power device, such as a 12V DC water pump or motor, for automated irrigation.

3.4 METHODOLOGY

The operation of the device is governed by the firmware programmed into the PIC16F877A and ESP32 microcontrollers.

1. **Data Acquisition and Processing:** The PIC16F877A continuously reads the analog voltage from the capacitive moisture sensor using its ADC. This raw ADC value is then converted into a calibrated moisture percentage. A two-point calibration process is essential for accuracy, where readings are taken in both completely dry and fully saturated coir to establish the sensor's operational range for that specific medium.
2. **Local Display and Control:** The calculated moisture percentage is displayed on the 16x2 LCD for immediate local feedback. The firmware implements a threshold-based control algorithm. A lower threshold, or "Maximum Allowable Depletion" (MAD), is set. When the measured moisture level drops below this MAD value, the PIC sends a HIGH signal to the relay module, which activates the motor and starts the water flow. The motor remains on until the moisture level reaches an upper threshold, known as "Field Capacity" (FC), at which point the PIC sends a LOW signal to the relay, stopping the motor. This prevents

CHAPTER 4

RESULT AND DISCUSSION

This chapter presents the results obtained from both the simulation and the physical hardware implementation of the coir moisture monitoring system. The outcomes validate the system's design and confirm its functionality in achieving the project's objectives.

4.1 SIMULATION RESULT

Before assembling the physical hardware, the circuit was designed and simulated using the Proteus Design Suite. This step is essential for verifying the circuit connections and the firmware logic in a controlled virtual environment, which helps in debugging and minimizes the risk of hardware damage.

The simulation circuit, shown in Fig. 4.1, included the PIC16F877A microcontroller, a potentiometer to simulate the analog output of the moisture sensor, a 16x2 LCD module, and an LED to represent the status of the motor (connected to the relay output pin). The compiled HEX file from the MikroC code was loaded into the virtual microcontroller.

Upon running the simulation, the system performed as expected. The potentiometer was used to vary the input voltage to the PIC's ADC, simulating changes in coir moisture. The following observations were made:

1. **Data Display:** The virtual LCD correctly displayed the moisture level as a percentage, as shown in Fig. 4.2. As the potentiometer's value was changed, the percentage on the LCD updated accordingly. This confirmed that the ADC was reading the input correctly and that the data conversion and LCD interfacing logic were functional.
2. **Control Logic:** A lower moisture threshold (MAD) was set in the firmware (e.g., 40%). When the simulated moisture level was above this threshold, the LED representing the motor remained OFF. When the potentiometer was adjusted to simulate a moisture level below 40%, the LED turned ON, indicating that the microcontroller had correctly triggered the relay. This successfully validated the threshold-based control algorithm. The simulation results provided strong confidence that the hardware design and software logic would function as intended in the physical prototype.

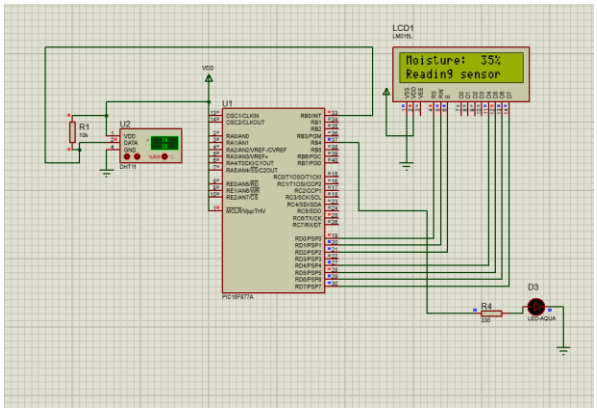

Figure 4.1 Simulation

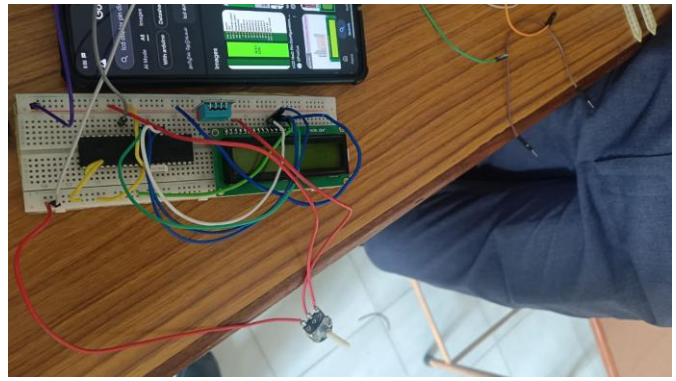

Figure 4.3 Hardware Output

4.2 HARDWARE OUTPUT

Following the successful simulation, a hardware prototype was assembled on a breadboard, as depicted in Fig. 4.3. The system included the PIC16F877A, a capacitive moisture sensor, an LCD, a relay module connected to a small DC motor, and an ESP32 for IoT communication.

The prototype was tested by inserting the moisture sensor into a sample of coir. The system's performance was observed as the coir was allowed to dry and then rehydrated by the automated system.

1. **Automated Irrigation:** The LCD displayed the real-time moisture content of the coir. As the coir dried and the moisture level dropped below the 40% threshold, the relay activated, and the motor began pumping water into the coir. The motor continued to run until the moisture level reached the upper threshold (Field Capacity, e.g., 80%), at which point the motor shut off. This test confirmed the successful operation of the closed-loop control system. By preventing the moisture level from exceeding the field capacity, the system effectively prevents over-saturation, which is the primary cause of groundwater seepage and nutrient leaching.
2. **Remote Data Logging:** The ESP32 successfully connected to the Wi-Fi network and transmitted the moisture data received from the PIC to a ThingSpeak channel. Fig. 4.4 shows a screenshot of the ThingSpeak dashboard, which plots the coir moisture percentage over time. This real-time graph allows for remote monitoring of the coir's hydration status and provides a valuable historical record for analyzing water usage and system performance. This functionality is crucial for minimizing environmental impact by enabling data-driven water

management decisions.

The hardware implementation successfully demonstrated that the device can efficiently monitor coir moisture and automate water application. This precise control directly contributes to preventing groundwater seepage and minimizing the overall environmental impact by conserving water and reducing the runoff of potentially harmful substances.

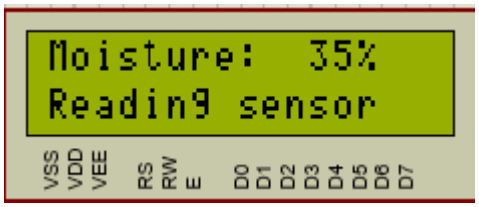

Figure 4.2 Sensor reading

Output demo

CHAPTER 5

CONCLUSION AND FUTURE SCOPE

5.1 CONCLUSION

This project successfully demonstrated the design and implementation of an intelligent device for monitoring coir moisture to prevent groundwater seepage and minimize environmental impact. The system, built around a PIC16F877A and an ESP32 microcontroller, effectively integrates a capacitive moisture sensor, a local LCD, and an automated motor control to maintain optimal moisture levels in coir media. By implementing a threshold-based control algorithm, the device prevents over-saturation, thereby conserving water and mitigating the leaching of salts and fertilizers. The successful integration with the ThingSpeak IoT platform enables real-time remote monitoring, providing a scalable and data-driven approach to sustainable coir management in both horticultural and geotechnical applications.

5.2 FUTURE SCOPE

The functionality of this system can be expanded in several ways. Future work could involve integrating additional sensors to monitor other critical parameters, such as the Electrical Conductivity (EC) and pH of the coir medium, providing a more comprehensive analysis of the growing conditions. The communication capabilities could be enhanced by using Low-Power Wide-Area Network (LPWAN) technologies like LoRaWAN, which would improve connectivity in remote or rural areas where Wi-Fi may not be available. Furthermore, machine learning algorithms could be incorporated into the cloud platform to predict irrigation needs based on historical data and weather forecasts, further optimizing water usage. Finally, a dedicated mobile application could be developed to provide a more user-friendly interface for remote monitoring and control.

REFERENCES

S. A. Ahire and S. P. A. Kumar, "Wireless Sensor Network for Environmental Monitoring System," *International Journal of Advanced Research in Computer and Communication Engineering*, vol. 5, no. 11, pp. 412-415, Nov. 2016.

S. Priyadharshini, S. S. Kumar, and S. Kumar, "Smart Drinking Water Quality Monitoring and Controlling System," *International Engineering and Science Research Journal*, vol. 2, no. 2, pp. 30-34, 2018.

K. Asparuhova, "Using Proteus to Support Engineering Student Learning Microcontroller-Driven Sensors," in *Proc. 2018 41st International Spring Seminar on Electronics Technology (ISSE)*, Zlatibor, Serbia, 2018, pp. 1-4.

G. S. Kumar, "Environment Monitoring System using IoT and Wireless Sensor network," *International Journal for Research in Applied Science & Engineering Technology (IJRASET)*, vol. 7, no. IV, pp. 2441-2445, Apr. 2019.

B. Su and L. Wang, "Application of proteus virtual system modelling (VSM) in teaching of microcontroller," in *Proc. 2010 2nd International Conference on E-Health Networking, Digital Ecosystems and Technologies*, Shenzhen, China, 2010, pp. 375-378.

M. R. Kanitkar and J. S. Awati, "Weather Monitoring using PIC Microcontroller and PLC," *International Journal of Engineering Research & Technology (IJERT)*, vol. 6, no. 13, 2018.

M. A. Hossain, M. R. I. Raju, M. M. Billah, and M. A. Rahman, "Advanced Automated Greenhouse System Designed to Implement Automation Controlling Environmental Air and Soil Entities," in *Proc. 5th International Conference on Mechanical, Industrial and Materials Engineering 2022 (ICMIME2022)*, Rajshahi, Bangladesh, 2022.

M. A. A. Abdullah, M. A. A. Al-Aboosi, and A. H. A. Al-Nadawi, "Design and Implementation of Smart Automated Greenhouse Monitoring System Based on Internet of Things and Solar Energy," *Journal of Engineering*, vol. 28, no. 10, pp. 1-15, 2022.

N. V. I. Research, "A PIC16F877A Microcontroller Based Automatic Temperature Controller," *International Journal of Recent Technology and Engineering (IJRTE)*, vol. 8, no. 4, Nov. 2019.